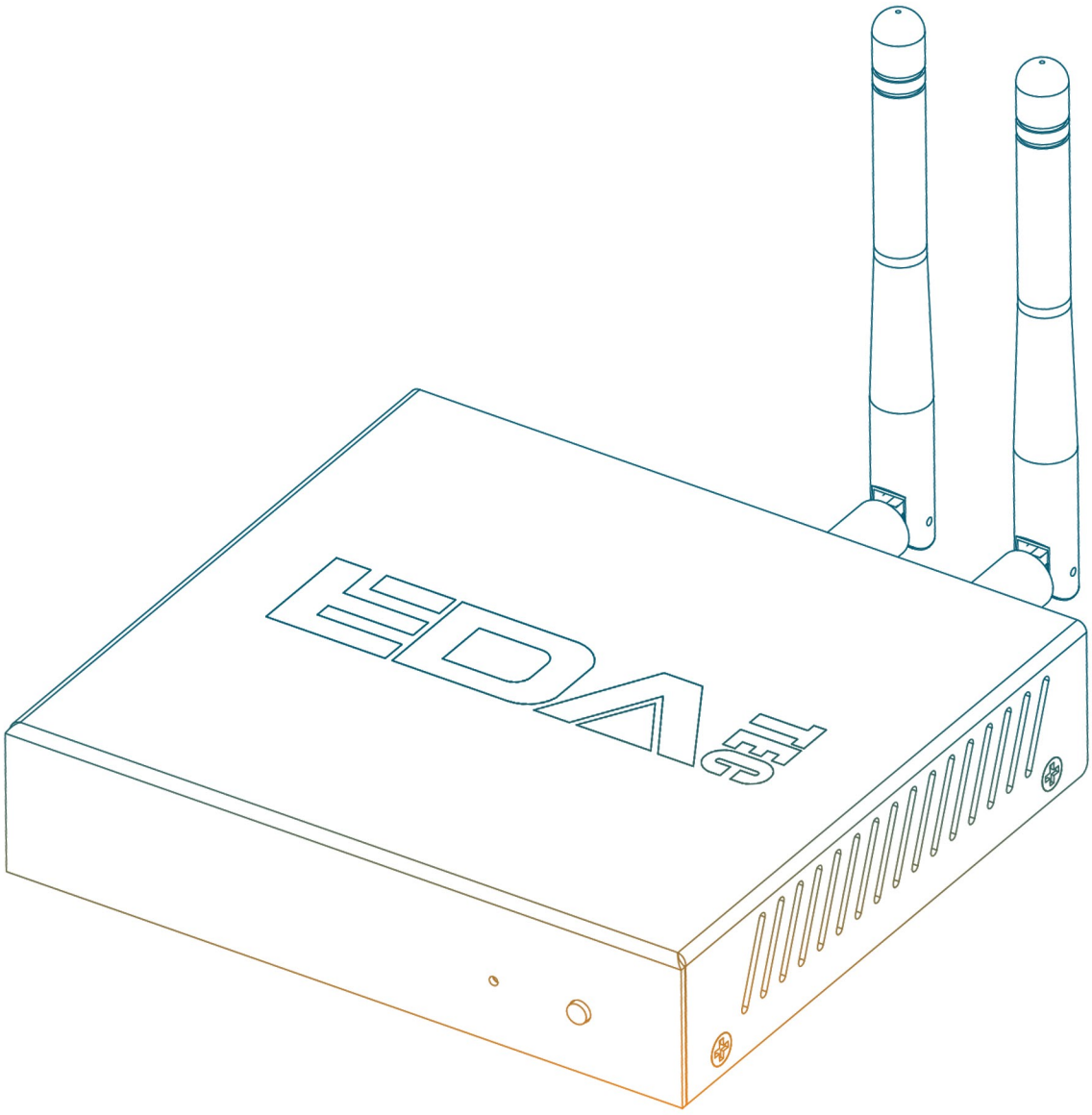

IoTHotspot M1

A Computer Based on Raspberry Pi Compute Module 4

EDA TECHNOLOGY CO.,LTD

Powered by Raspberry Pi

Highlight

- Wider coverage, with Semtech SX1302 + SX1250 concentrator
- High performance, with 580MHz MIPS processor, 128MB or 256MB DDR, 16MB or 32MB Flash
- Full coverage Network with WiFi and Bluetooth 5.1 with external antenna
- Managing & diagnosing from Remote Access Dashboard in LAN
- OTA support enables automatic online upgrades, without any activation or monitoring operation

RoHS

Powered by Raspberry Pi

Introduction

ED-IoTHotspot-M1 is a Helium Indoor Light Hotspot designed by EDATEC. By deploying it at your home or office, you can provide your city with miles of low-power network coverage for billions of devices and earn a new cryptocurrency, HNT.

Powered By Helium: Helium is a global, distributed network of Hotspots that create public, long-range wireless coverage for LoRaWAN-enabled IoT devices. Hotspots produce and are compensated in HNT, the native cryptocurrency of the Helium blockchain. The Helium blockchain is a new, open source, public blockchain created entirely to incentivize the creation of physical, decentralized wireless networks. Today, the Helium blockchain, and its hundreds of thousands of Hotspots, provide access to the largest LoRaWAN Network in the world.

Powered by Helium LongFi: Helium LongFi is a technology architecture that combines a leading wireless technology, LoRaWAN, and the Helium Blockchain. LongFi is optimized for miles of range, and long battery life for IoT devices.

Remote Management and Diagnostic: Easily manage Hotspots and tokens from the Helium official mobile app.Built-in Dashboard for remote management, remote diagnostic, firmware upgrades accessed in LAN.OTA support–Automatic OTA upgrades to do self diagnostic and make the firmware always latest to miner more HNT.

Optimized for Indoor Use: WiFi with external antenna for better network access.Multiple Optional LoRa antenna - 2.5dBi / 5.8dBi.Silent - Efficient cooling system. No fan needed.Low power - Uses as much power as a broadband router(5W).

Frequency Selection: The ED-IoTHotspot-M1 comes in 3 different frequency variants:868 MHz (EU868, IN865, RU864) - this is suitable for EU, India, Russia and a variety of other countries.915 MHz (US915, AU915, KR920, AS923-1/2/3) - this is suitable for USA, Australia, New Zealand and lots of countries in South America and Asia.

Specifications

Item	Feature
Processing capability	580MHz MIPS processor 128MB or 256MB DDR
Wired interface	1x 10 / 100M Ethernet
Wireless communication	2.4GHz 802.11 b/g/n wireless LAN Bluetooth 4.2, BLE External Antenna
Storage	16MB or 32MB Flash
LoRa Concentrator	Semtech SX1302 + SX1250
Security	Built-in ATECC608A crypto device
Frequency Band Support	868 ~ 870 MHz (EU868, IN865, RU864) 902 ~ 928 MHz (US915, AU915, KR920, AS923-1/2/3)
Sensitivity	-125dBm @125KHz/SF7 -139dBm @125KHz/SF12
TX Power	Up to 27dBm
Antenna	1x WiFi / BT external Antenna 1x 2.5dBi LoRa Antenna Optional 5.8dBi LoRa Antenna
LED Indicator	1x RGB LED
Button	1x Button for Hotspot Configuration
Power Supply	DC 7.5 V ~ 18V
Operating Temperature	0°C to 50°C
Relative Humidity	0% - 90%
Heat Dissipation	Aluminum enclosure
Dimension	95mm(L) x 95mm(W) x 26mm(H)

Dimension Unit:mm

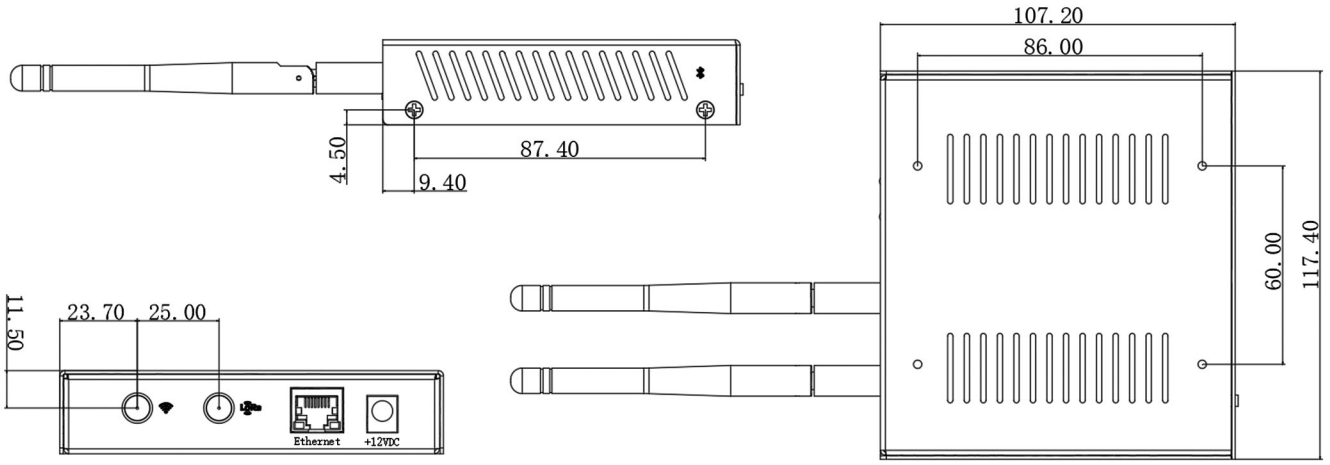

Order Information

Item	Feature
ED-IoTHotspot-M1-EU	868 MHz (EU868, IN865, RU864) - this is suitable for EU, India, Russia and a variety of other countries
ED-IoTHotspot-M1-US	915 MHz (US915, AU915, KR920, AS923-1/2/3) - this is suitable for USA, Australia, New Zealand and lots of countries in South America and Asia.

Contact Information

If you have any technical problems, please contact:

Support:support@edatec.cn

Business releated, such as Quotation, Product Customization, please contact:

Sales:sales@edatec.cn

Web:www.edatec.cn

Tel / Mobile / Fax:+86-18621560183